Thule FreeWay
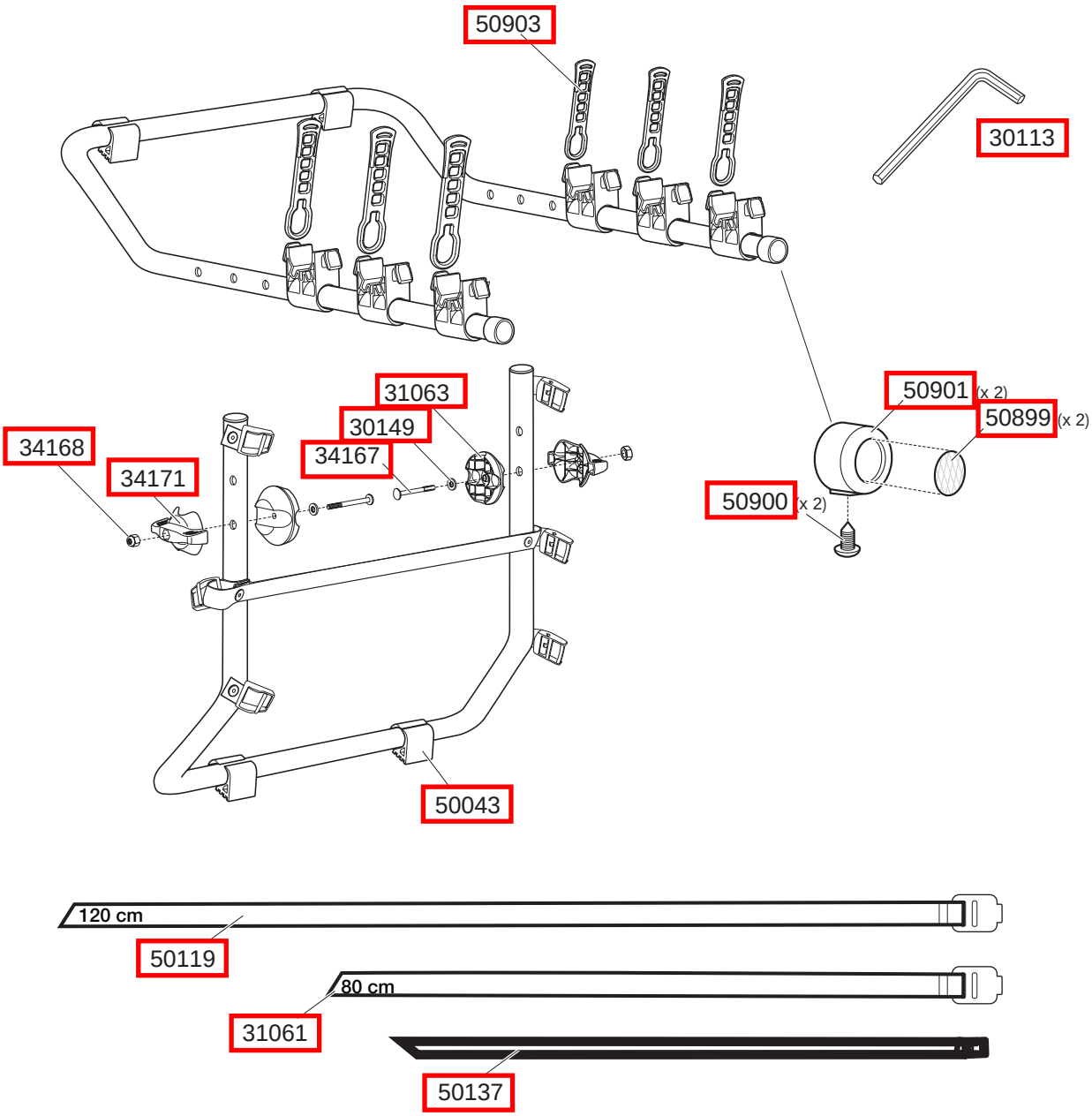
968