Thule VeloSpace

917, 918

THULE SWEDEN

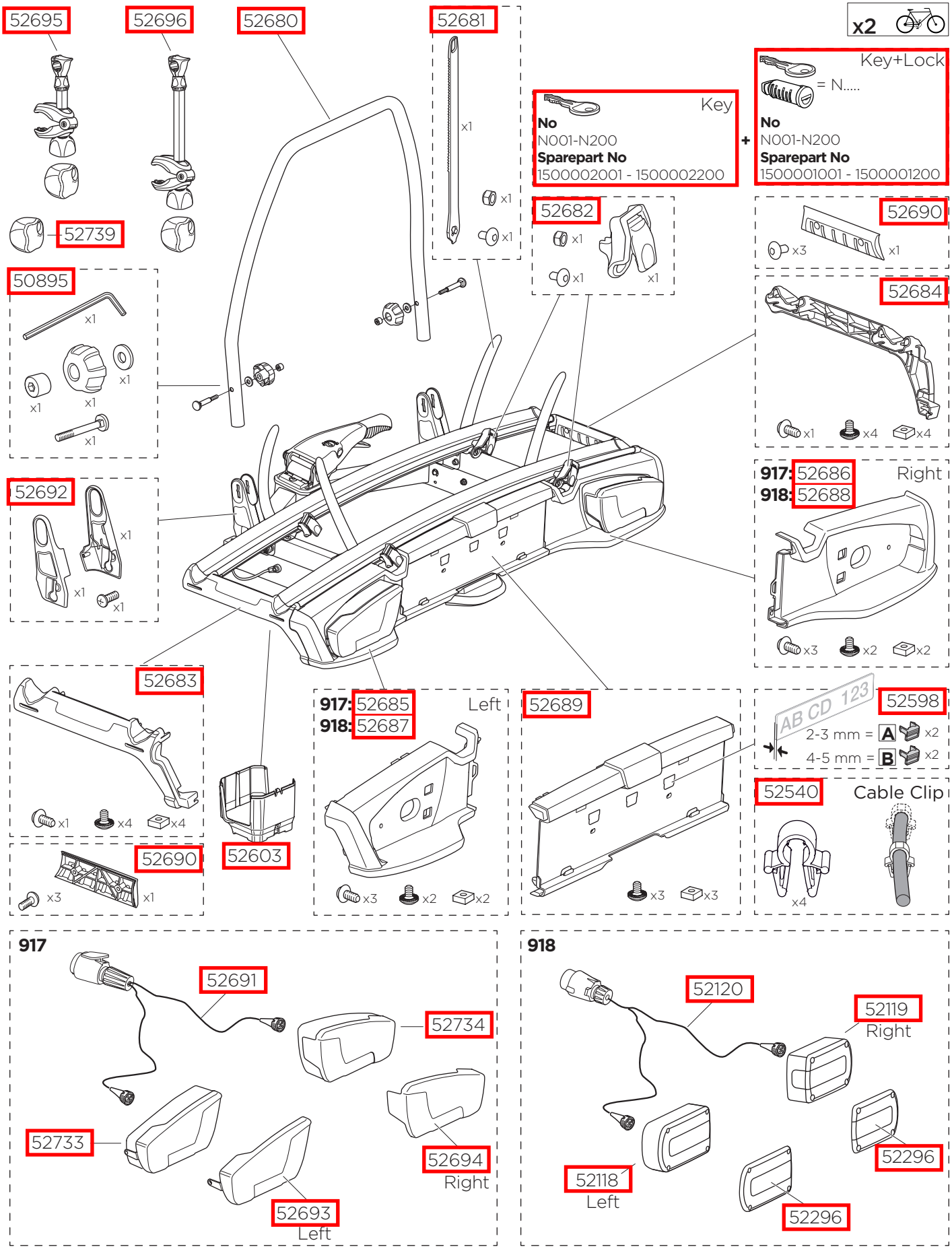

PART OF THULE GROUP