Thule Motion 900 / XXL

6202

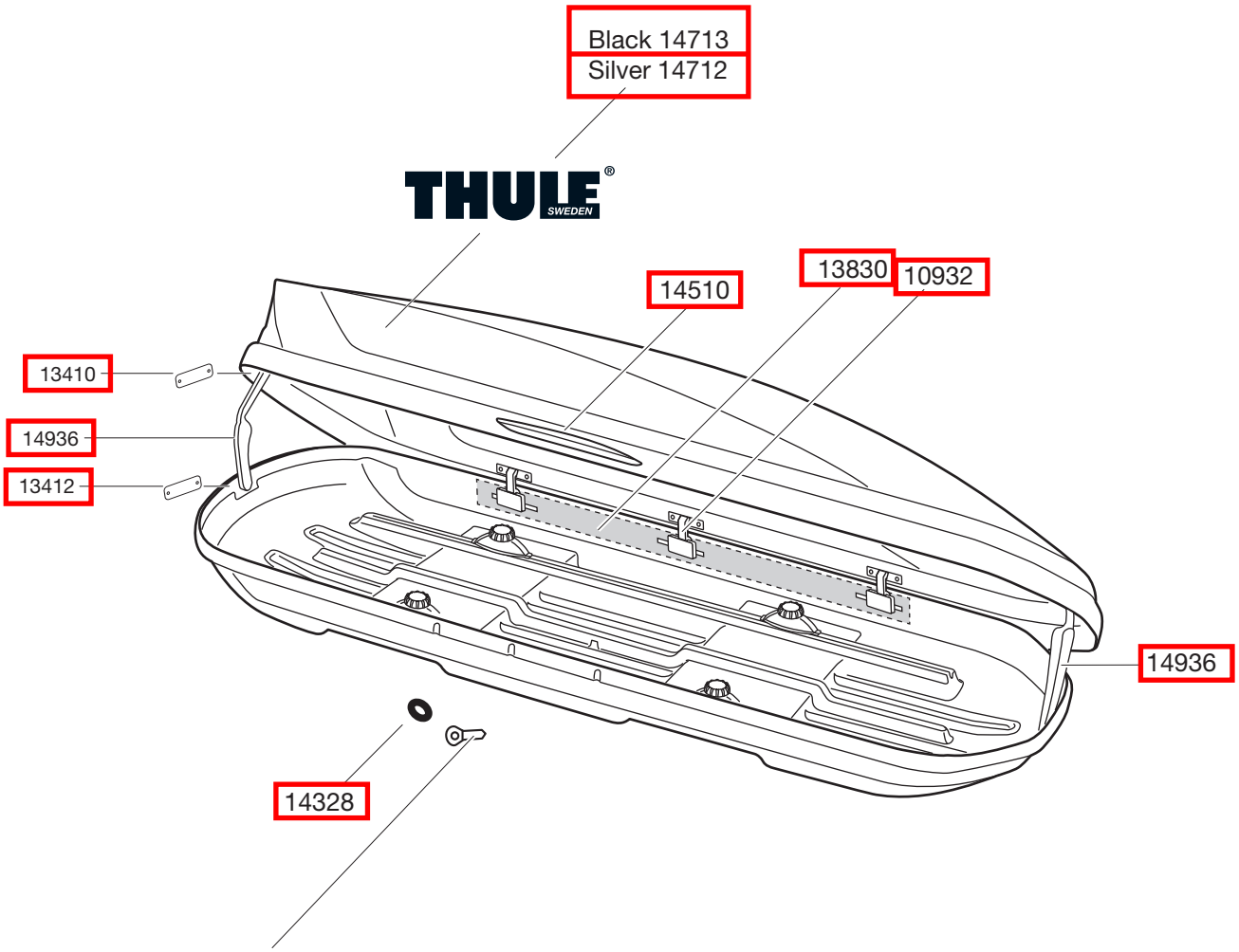

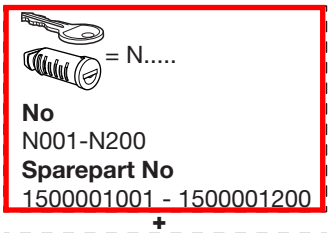
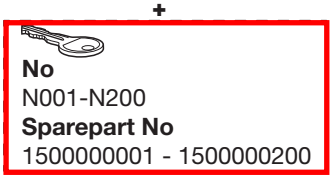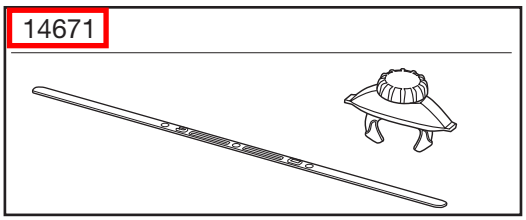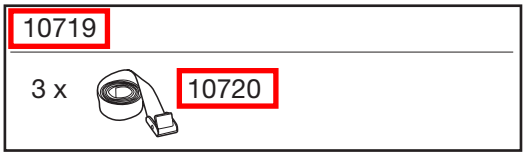
+